□ □ □□□□ □□□□□ □

- □□□ □ □ □□ □ □ □ □ □ □ □ □ □ □ □ □

[illegible] ※[illegible]

1 [illegible]

① [illegible] 2[illegible]

② [illegible]

③ [illegible]

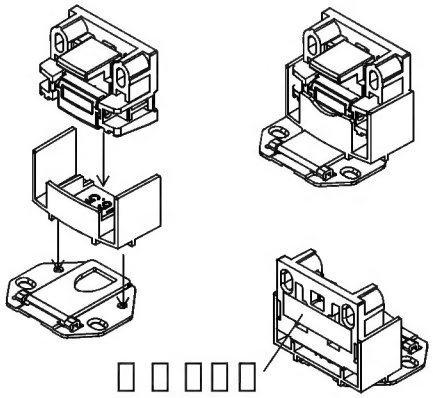

2 [illegible]

① [illegible]

② [illegible]

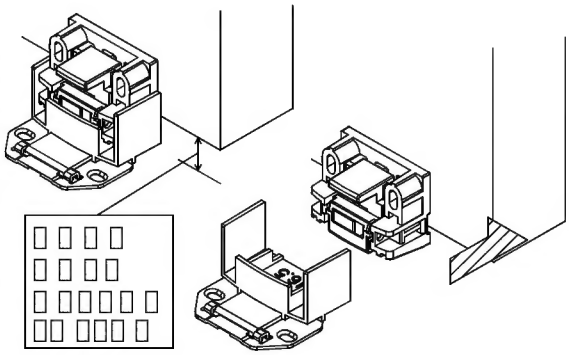

3 [illegible]

① [illegible]

② [illegible]

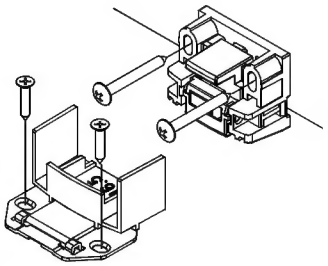

4 [illegible]

① [illegible]

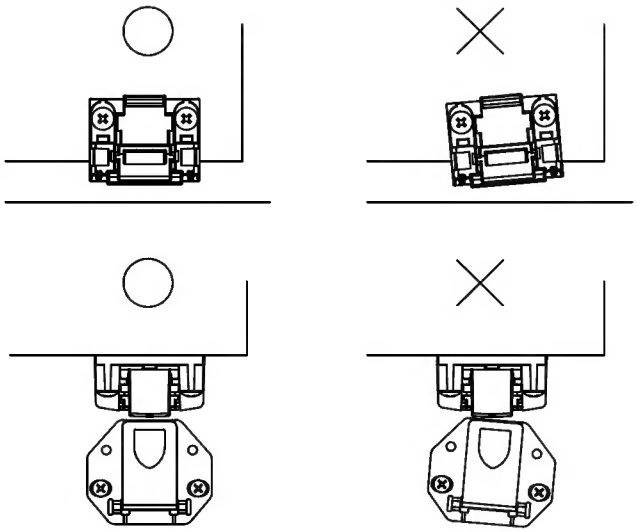

② [illegible]

③ [illegible]

5 [illegible]

① [illegible]

② [illegible]

③ [illegible]

④ [illegible]

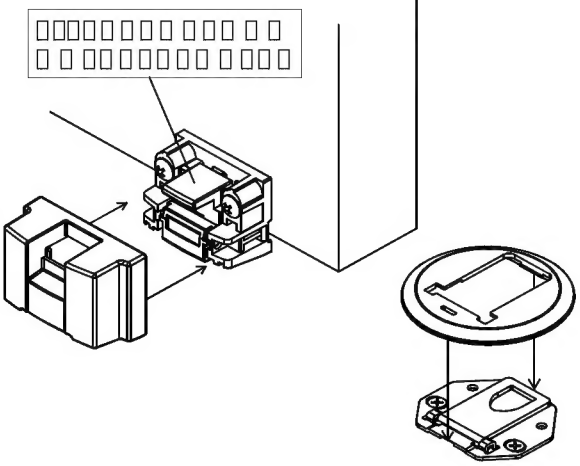

[illegible]

■ [illegible]

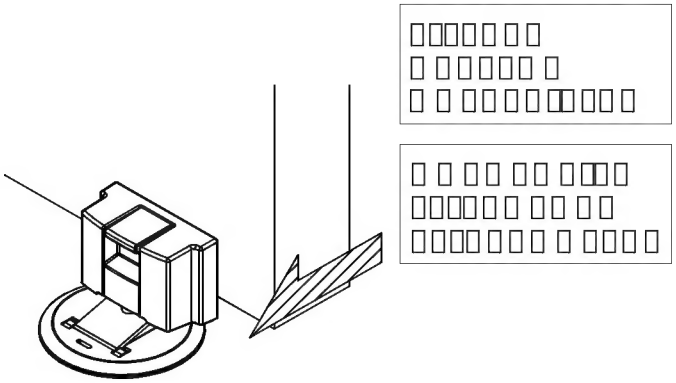

※ [illegible]

■ [illegible]

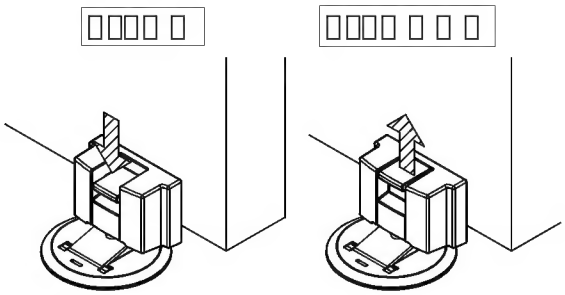

※ [illegible]

※ [illegible]

※ [illegible]